V1.2 NOTE: THIS DEVICE IS ROHS COMPLIANT.

REVISIONS							
SYM	DESCRIPTION	DATE	APPROVED	SYM	DESCRIPTION	DATE	APPROVED
△	REVISE DRAWING	21/MAR/17'	AARON	△			
△				△			
**CUSTOMER DRAWING FOR REFERANCE ONLY, SAMPLES APPROVAL ARE REQUIRED!!							082

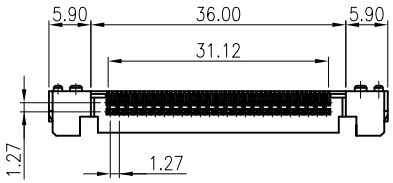

PIN TYPE	DIM.L	PIN TYPE
DETEC	3.5	25, 26
GENERAL	4.25	ALL OTHER PIN
POWER	5.0	1, 13, 38, 50

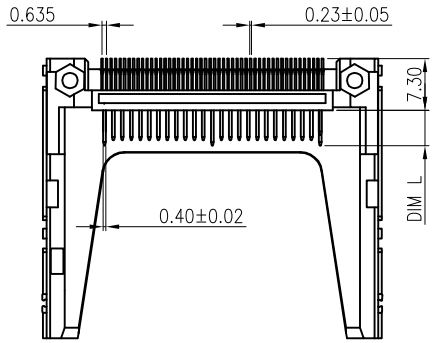

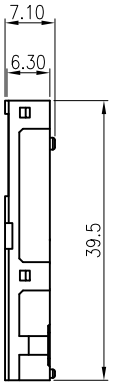

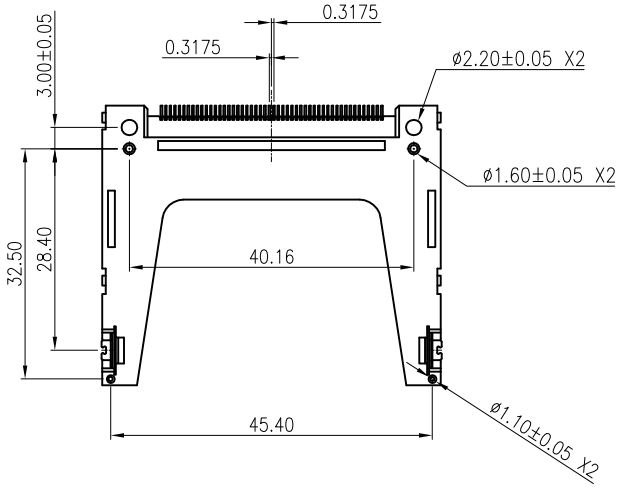

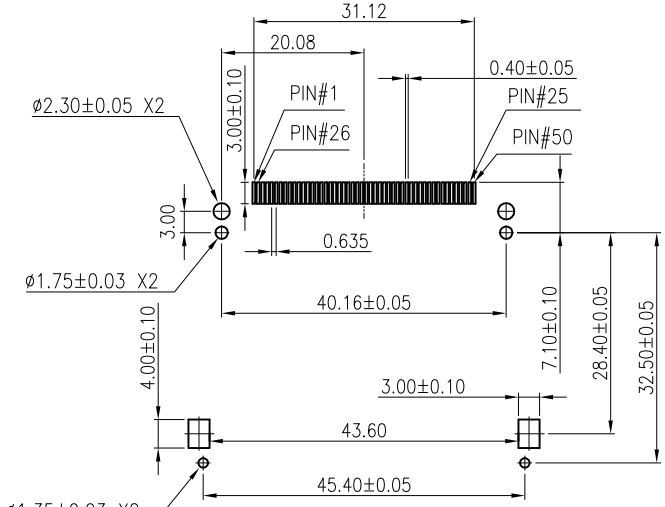

PCB LAYOUT

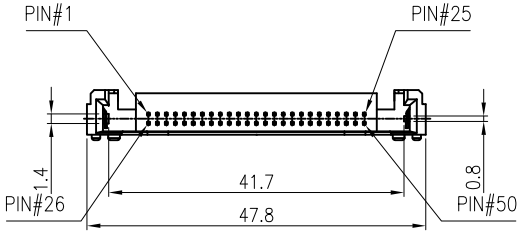

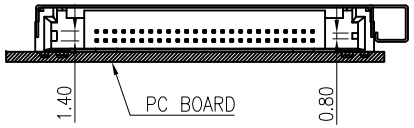

ORDER INFORMATION:
CFC013-RtM50Gft-A
CFC: COMPACT FLASH CARD CONNECTOR
013: SERIES NO.
Rt: PCB TYPE, RIGHT ANGLE AND SURFACE MOUNT
M: MALE
50: NO. OF CONTACT
Gft: TERMINAL PLATING, GOLD FLUSH ON CONTACT,
TIN PLATING ON SOLDER TAIL
A: TOP MOUINT

SPECIFICATION:
HOUSING: HIGH TEMPERATURE PLASTIC,
UL 94V-0
CONTACT: COPPER ALLOYS
VOLTAGE RATING: 100VAC
CUPPNT RATING: 0.5A
CONTACT RESISTANCE: 40mΩ MAX
INSULATION RESISTANCE: 1000MΩ MIN
DIELECTRIC STRENGTH: 500VAC/1MIN
OPERATION TEMPERATURE: -40°C~85°C

TOLERANCES UNLESS OTHERWISE SPECIFIED ±0.20			SIGNATURES		DATE	MODEL
			DRAWN	AARON	16/NOV/05'	TITLE CF CARD CONNECTOR
SYMBOL	UNIT	SCALE	CHECKED	WENDY	16/NOV/05'	NO.
△	mm	2/1	APPROVALS			CFC013-RtM50Gft-A

MMT CORPORATION

TEL:(510)979-2188 www.mmtmachrone.com FAX:(510)979-2189